PRODUCT SHEET

Snap Frame Standard A0 Mitred Corners 25 mm Wood

KRA0G25LB

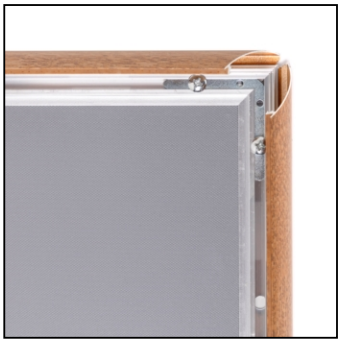

- **Cost effective, elegant display solution for A0 posters**
- **Quick poster replacement**
- **Over 20 variations available**

PRODUCT SHEET

Snap Frame Standard A0 Mitred Corners 25 mm Wood

KRA0G25LB

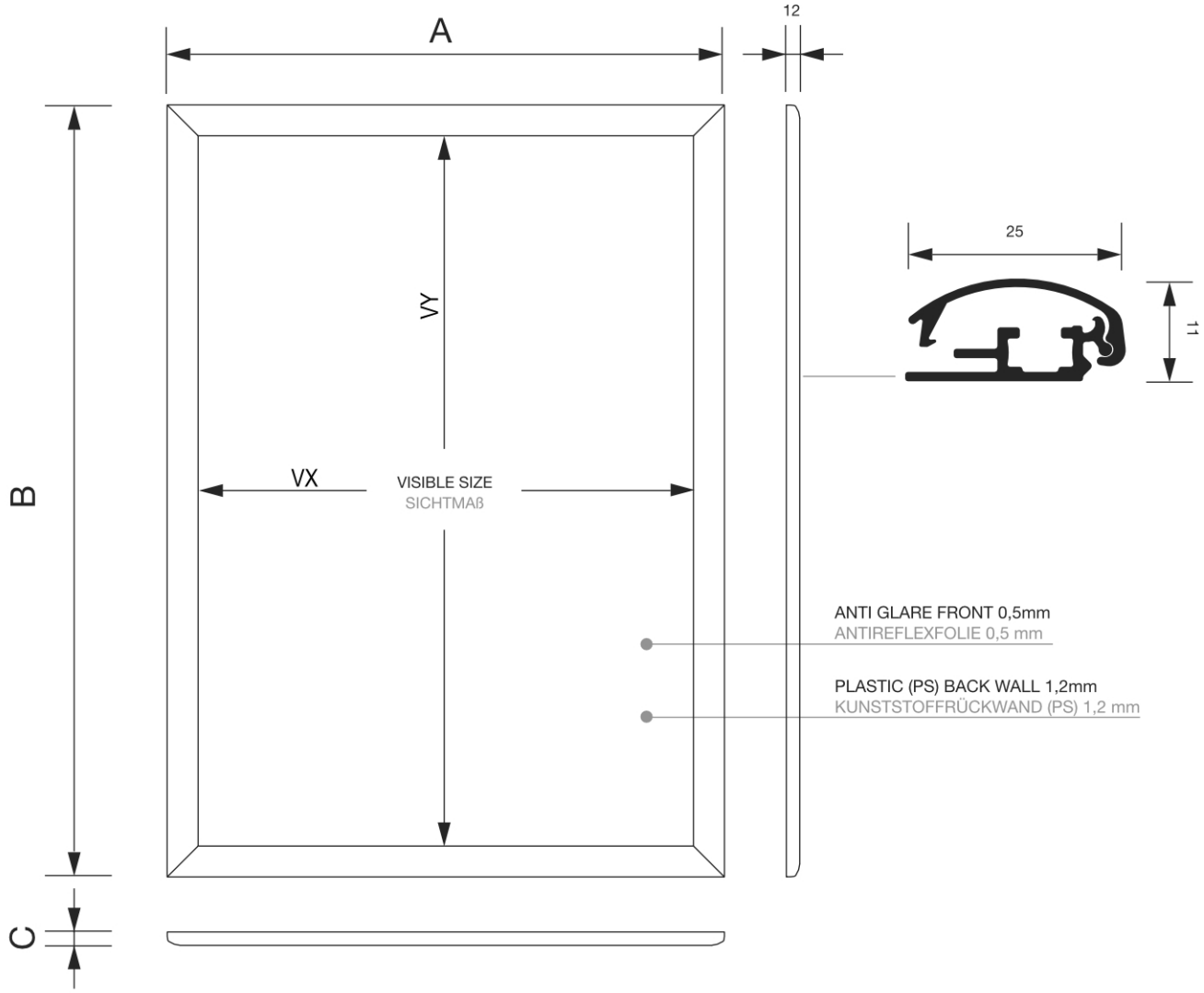

BACK VIEW
RÜCKANSICHT

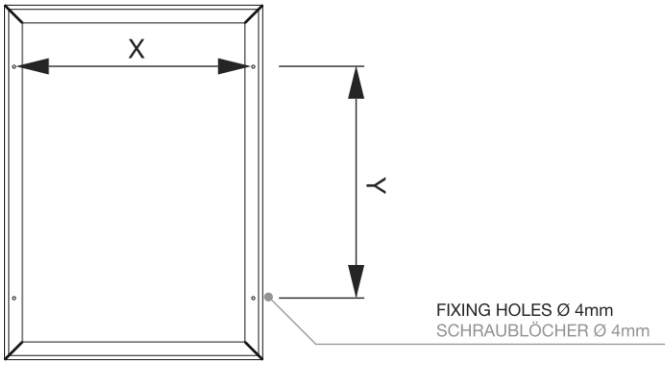

ACCESSORIES
ZUBEHÖR

(SOSSET)
SET OF SCREWS
SCHRAUBENSET

(KRHOOK)
HANGING HOOKS
HAKEN ZUM ABHÄNGEN

(HSKR)
HANGING SET
HÄNGESET

PRODUCT SHEET

Snap Frame Standard A0 Mitred Corners 25 mm Wood

KRA0G25LB

GENERAL INFO

SKU	Sizes (mm) (A x B x C)	Format (mm)	Visible size (mm) (VXxVY)	Hole spacing (mm) (XxY)
KRA0G25LB	872 x 1220 x 11	A0 (841 x 1189 mm)	822 x 1170 mm	852 x 931 mm

Orientation	Weight (kg)
Vertical	2,83

PACKAGING INFORMATION

Packaging unit 1 (mm)	Packaging unit 2 (mm)	Packaging unit 3 (mm)
1235 x 890 x 20	-	-

Palette number of pieces	Palette weight (kg)	Palette type
35	169	EUR

ADDITIONAL INFORMATION

Product certifications	EAN
No	8596052191435

SIZE GUIDE

Snap Frame Standard A0 Mitred Corners 25 mm Wood
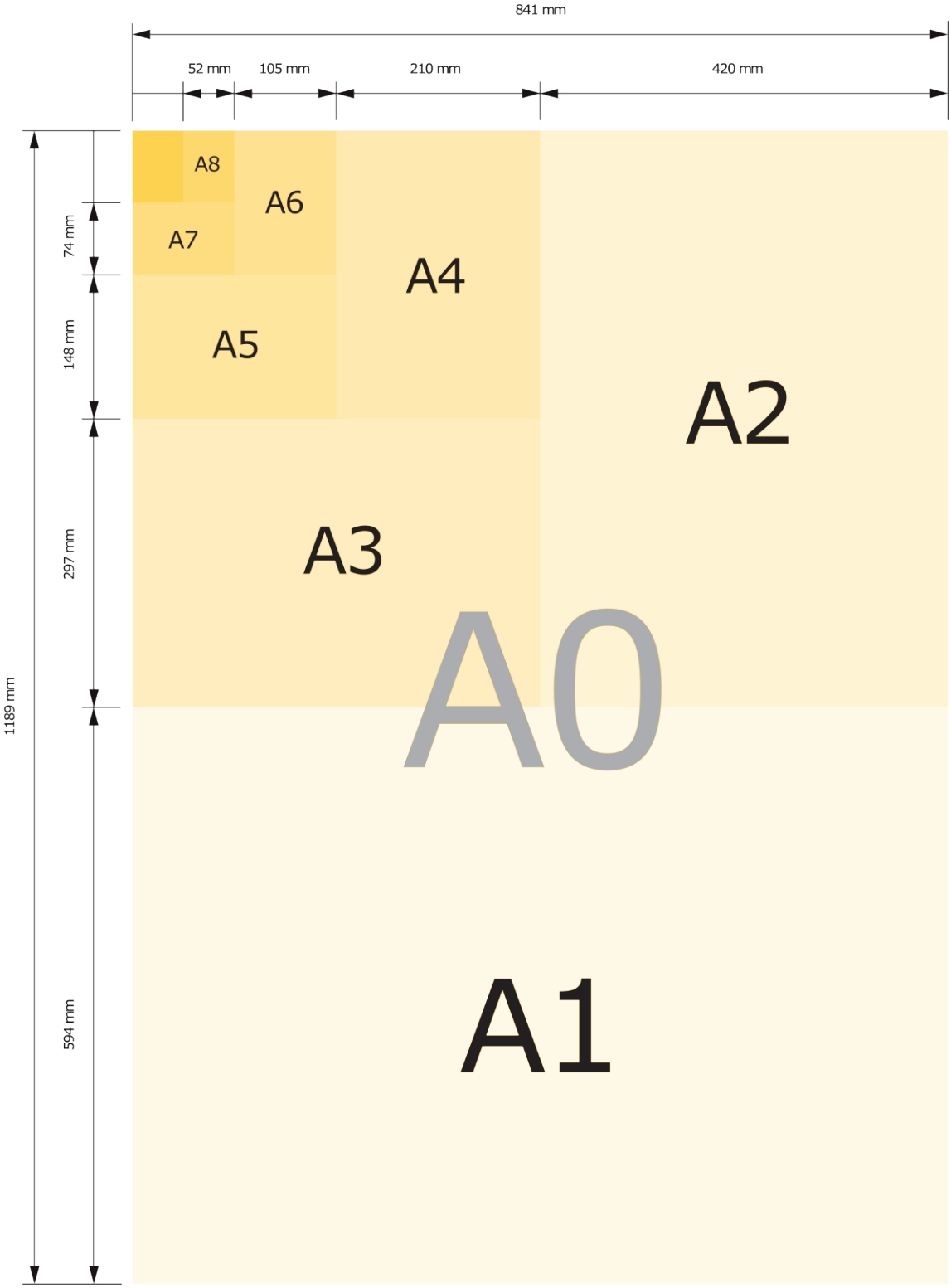
KRA0G25LB